644K 4WD Loader Engine 6068HDW80 (T3), 6068HDW83 (S2) Operation and Test

(S.N. —642443)

OPERATION & TEST TECHNICAL MANUAL

644K 4WD Loader
Engine 6068HDW80 (T3),
6068HDW83 (S2)
(S.N. —642443)

TM10694 19DEC18 (ENGLISH)

Worldwide Construction
And Forestry Division
PRINTED IN U.S.A

Introduction

Foreword

This manual is written for an experienced technician. Essential tools required in performing certain service work are identified in this manual and are recommended for use.

Live with safety: Read the safety messages in the introduction of this manual and the cautions presented throughout the text of the manual.

⚠ This is the safety-alert symbol. When you see this symbol on the machine or in this manual, be alert to the potential for personal injury.

Technical manuals are divided in two parts: repair and operation and tests. Repair sections tell how to repair the components. Operation and tests sections help you identify the majority of routine failures quickly.

Information is organized in groups for the various components requiring service instruction. At the beginning of each group are summary listings of all applicable essential tools, service equipment and tools, other materials needed to do the job, service parts kits, specifications, wear tolerances, and torque values.

Technical Manuals are concise guides for specific machines. They are on-the-job guides containing only the vital information needed for diagnosis, analysis, testing, and repair.

Fundamental service information is available from other sources covering basic theory of operation, fundamentals of troubleshooting, general maintenance, and basic type of failures and their causes.

TX,INTR,DU2141 -19-22MAR97-1/1

Manual Identification—READ THIS FIRST!

IMPORTANT: Use only supporting manuals designated for your specific machine. If incorrect manual is chosen, improper service may occur. Verify product identification number (PIN) and engine model number when choosing the correct manual.

Choosing the Correct Supporting Manuals

John Deere four wheel drive (4WD) loaders are available in different machine configurations based on the various markets into which they are sold. Different supporting manuals exist for different machine configurations.

When necessary, product serial numbers and engine model numbers are listed on the front covers of 4WD loader manuals. These numbers are used to identify the correct supporting manual for your machine.

Product Serial Number Identification

The product identification number (PIN) plate (1) is located on left side of machine frame under the cab door. Each machine has a 13-character PIN (2) or 17-character PIN (3) shown on this plate. The last 6 characters of the PIN represent the machine's product serial number.

1— PIN Plate
2— 13-Character PIN
3— 17-Character PIN

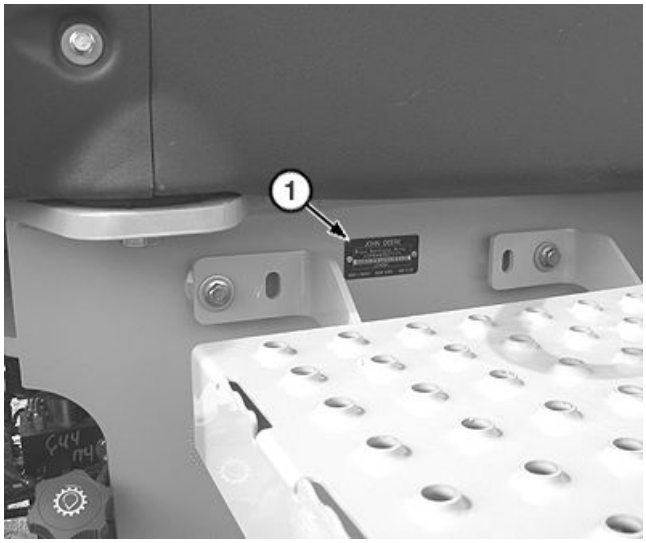

TX1082004A —UN—15APR13

PIN Plate Location

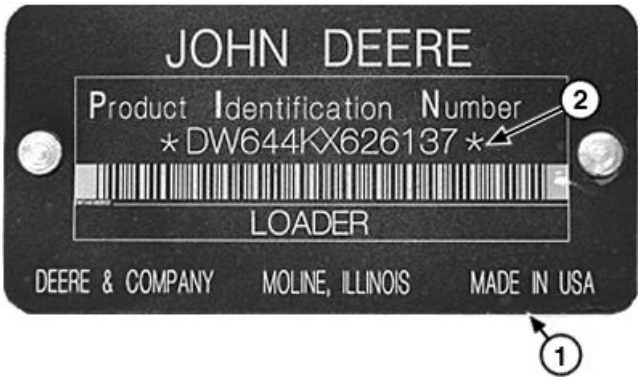

TX1081996A —UN—17SEP10

PIN Plate (13-character)

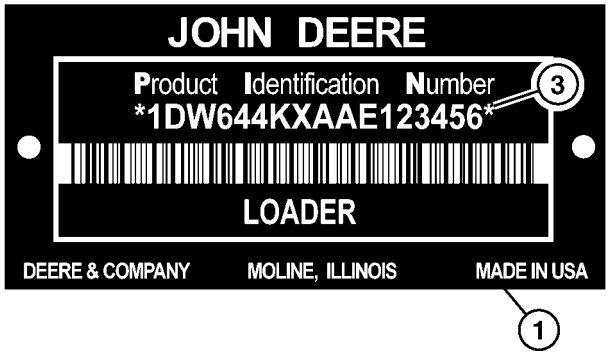

TX1082023 —UN—21SEP10

PIN Plate (17-character)

Continued on next page

OUT4001,000069C -19-06JUN12-1/2

Engine Model Number Identification

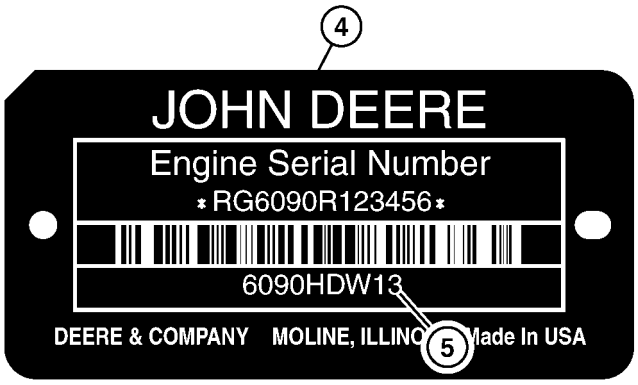

TX1082024 —UN—21SEP10

Engine Serial Number Plate

The engine serial number plate (4) is located on the right side of the engine for engine model 6090HDW13. It is located on the left side of engine for engine models 6068HDW80 and 6068HDW83. Each engine has a 9-character engine model number (5) shown on this plate.

Engine Emissions Level Identification

The 9-character engine model number corresponds to a specific engine emissions level.

Engine Model Number	Engine Emissions Level
6090HDW13	Interim Tier 4/Stage III B
6068HDW80	Tier 3/Stage III A
6068HDW83	Stage II

For machines equipped with a 17-character PIN, where the 11th character is “E”, “D”, or “C”, this character also corresponds to a specific engine emissions level.

NOTE: Later machines with a 17-character PIN identify engine emissions level (“E”, “D”, or “C”) with the 11th character. Earlier machines with a 17-character PIN do not identify engine emissions level with the 11th character.

17-Character PIN (11th character)	Engine Emissions Level
xxxxxxxxxx**E**xxxxxx	Interim Tier 4/Stage III B
xxxxxxxxxx**D**xxxxxx	Tier 3/Stage III A
xxxxxxxxxx**C**xxxxxx	Stage II

4— Engine Serial Number Plate **5— 9-Character Engine Model Number**

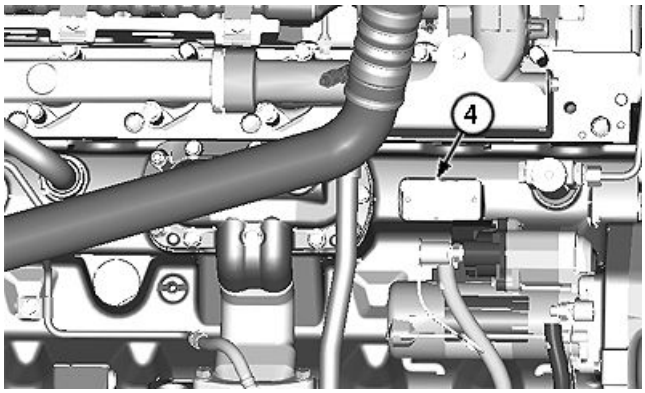

TX1082090A —UN—08NOV10

Engine Serial Number Plate Location—6090HDW13

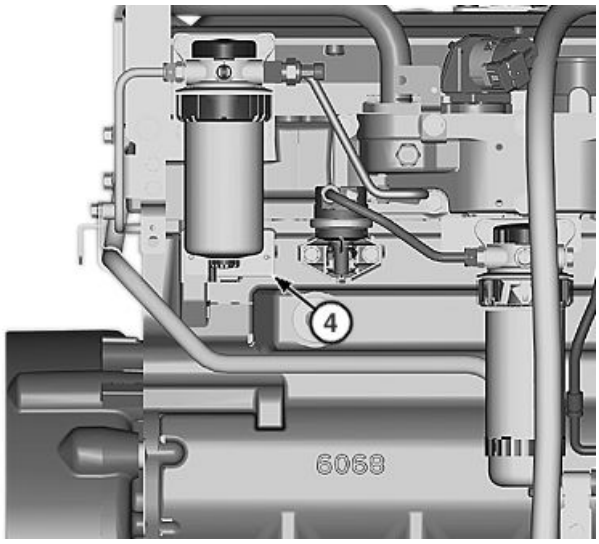

TX1081900A —UN—15APR13

Engine Serial Number Plate Location—6068HDW80

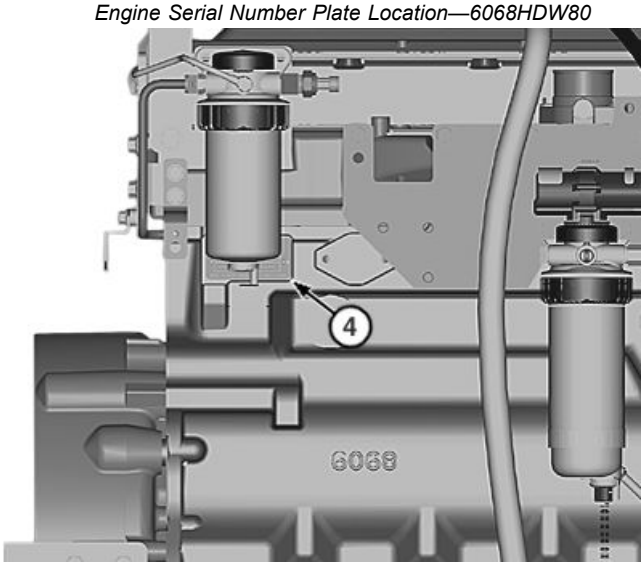

TX1081901A —UN—15APR13

Engine Serial Number Plate Location—6068HDW83

OUT4001,000069C -19-06JUN12-2/2

Contents

Section 9000—General Information
Group 01—Safety Information

Section 9001—Diagnostic Trouble Codes (DTC)
Group 10—Engine Control Unit (ECU) Diagnostic Trouble Codes
Group 20—Transmission Control Unit (TCU) Diagnostic Trouble Codes
Group 30—Flex Load Controller (FLC) Diagnostic Trouble Codes
Group 40—Sealed Switch Module (SSM) Diagnostic Trouble Codes
Group 50—Advanced Display Unit (ADU) Diagnostic Trouble Codes
Group 60—Radar Object Detection (ROD) Diagnostic Trouble Codes
Group 70—Ground Speed Radar (RDR) Diagnostic Trouble Codes
Group 80—Joystick Steering Valve (JSV) Diagnostic Trouble Codes
Group 90—Joystick Steering Controller (JSC) Diagnostic Trouble Codes
Group 100—Tire Pressure Monitoring (TPM) System Diagnostic Trouble Codes

Section 9005—Operational Checkout Procedure
Group 10—Operational Checkout Procedure

Section 9010—Engine
Group 05—Theory Of Operation
Group 15—Diagnostic Information
Group 25—Tests

Section 9015—Electrical System
Group 05—System Information
Group 10—System Diagrams
Group 15—Sub-System Diagnostics
Group 16—Monitor Operation
Group 20—References

Section 9020—Power Train
Group 05—Theory of Operation
Group 15—Diagnostic Information
Group 20—Adjustments
Group 25—Tests

Section 9025—Hydraulic System
Group 05—Theory Of Operation
Group 15—Diagnostic Information
Group 20—Adjustments
Group 25—Test

Section 9031—Heating and Air Conditioning
Group 05—Theory of Operation
Group 15—Diagnostic Information
Group 25—Tests

Original Instructions. All information, illustrations and specifications in this manual are based on the latest information available at the time of publication. The right is reserved to make changes at any time without notice.

COPYRIGHT © 2018
DEERE & COMPANY
Moline, Illinois
All rights reserved.
A John Deere ILLUSTRUCTION ™ Manual
Previous Editions
Copyright © 2008, 2009, 2010, 2011, 2012, 2013, 2014, 2016,2017

Thanks very much for your reading,

Want to get more information,

Please click here, Then get the complete manual

JustClickHere

NOTE:

If there is no response to click on the link above, please download the PDF document first, and then click on it.

Have any questions please write to me:
admin@servicemanualperfect.com

Section 9000
General Information

Contents

Page

Group 01—Safety Information
Recognize Safety Information 9000-01-1
Follow Safety Instructions..... 9000-01-1
Operate Only If Qualified 9000-01-1
Wear Protective Equipment..... 9000-01-2
Avoid Unauthorized Machine
Modifications..... 9000-01-2
Add Cab Guarding For Special
Uses 9000-01-2
Inspect Machine 9000-01-3
Stay Clear of Moving Parts..... 9000-01-3
Avoid High-Pressure Fluids 9000-01-3
Avoid High-Pressure Oils 9000-01-4
Beware of Exhaust Fumes 9000-01-4
Prevent Fires 9000-01-5
Clean Debris from Machine..... 9000-01-5
Prevent Battery Explosions 9000-01-6
Handle Chemical Products Safely..... 9000-01-6
Dispose of Waste Properly 9000-01-6
Prepare for Emergencies..... 9000-01-7
Use Steps and Handholds
Correctly 9000-01-7
Start Only From Operator's Seat 9000-01-7
Use and Maintain Seat Belt..... 9000-01-7
Prevent Unintended Machine
Movement..... 9000-01-8
Avoid Work Site Hazards..... 9000-01-9
Use Special Care When Operating
Loader 9000-01-10
Keep Riders Off Machine 9000-01-10
Avoid Backover Accidents..... 9000-01-10
Avoid Machine Tip Over 9000-01-11
Operating on Slopes..... 9000-01-11
Operating or Traveling On Public
Roads 9000-01-12
Inspect and Maintain ROPS 9000-01-12
Add and Operate Attachments
Safely..... 9000-01-12
Park And Prepare For Service
Safely..... 9000-01-13
Service Cooling System Safely 9000-01-13
Service Tires Safely..... 9000-01-14
Remove Paint Before Welding or
Heating 9000-01-14
Make Welding Repairs Safely 9000-01-15
Drive Metal Pins Safely 9000-01-15

Recognize Safety Information

This is the safety alert symbol. When you see this symbol on your machine or in this manual, be alert for the potential of personal injury.

Follow the precautions and safe operating practices highlighted by this symbol.

A signal word — DANGER, WARNING, or CAUTION — is used with the safety alert symbol. DANGER identifies the most serious hazards.

On your machine, DANGER signs are red in color, WARNING signs are orange, and CAUTION signs are yellow. DANGER and WARNING signs are located near specific hazards. General precautions are on CAUTION labels.

T133555 —UN—15APR13

T133588 —19—28AUG00

TX03679,00016CC -19-03NOV08-1/1

Follow Safety Instructions

Read the safety messages in this manual and on the machine. Follow these warnings and instructions carefully. Review them frequently. Keep safety signs in good condition. Replace missing or damaged safety signs. Replacement safety signs are available from your authorized John Deere dealer.

Be sure all operators of this machine understand every safety message. Replace operator's manual and safety labels immediately if missing or damaged.

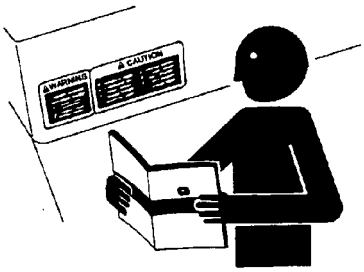

T133556 —UN—24AUG00

TX03679,00016F9 -19-18OCT07-1/1

Operate Only If Qualified

Do not operate this machine unless you have read the operator's manual carefully and you have been qualified by supervised training and instruction.

Familiarize yourself with the job site and your surroundings before operating. Try all controls and machine functions with the machine in an open area before starting to work.

Know and observe all safety rules that may apply to your work situation and your work site.

TX03679,00016FA -19-03NOV08-1/1

Wear Protective Equipment

Guard against injury from flying pieces of metal or debris; wear goggles or safety glasses.

Wear close fitting clothing and safety equipment appropriate to the job.

Prolonged exposure to loud noise can cause impairment or loss of hearing. Wear suitable hearing protection such as earmuffs or earplugs to protect against objectionable or uncomfortable loud noises.

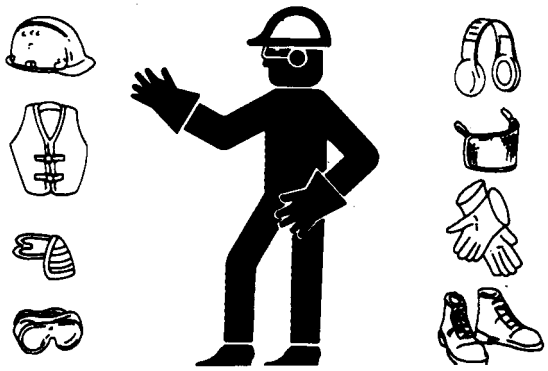

Protective Equipment

TS206 —UN—15APR13

TX03679,00016D0 -19-06JAN16-1/1

Avoid Unauthorized Machine Modifications

John Deere recommends using only genuine John Deere replacement parts to ensure machine performance. Never substitute genuine John Deere parts with alternate parts not intended for the application as these can create hazardous situations or hazardous performance. Non-John Deere Parts, or any damage or failures resulting from their use, are not covered by any John Deere warranty.

Modifications of this machine, or addition of unapproved products or attachments, may affect machine stability or reliability, and may create a hazard for the operator or others near the machine. The installer of any modification which may affect the electronic controls of this machine is responsible for establishing that the modification does not adversely affect the machine or its performance.

Always contact an authorized John Deere dealer before making machine modifications that change the intended use, weight, or balance of the machine, or that alter machine controls, performance, or reliability.

AM40430,00000A9 -19-02JUN15-1/1

Add Cab Guarding For Special Uses

Special work situations or machine attachments may create an environment with falling or flying objects. Loading logs, using fork attachments, or operating in waste management applications requires special work tools. Added cab guarding to protect the operator may also be required.

Use load-clamping grapples to keep bulky loads from falling and add special screens or guarding when objects may be directed toward the cab. Contact your authorized John Deere dealer for information on devices intended to protect the operator from falling or flying objects in special work situations.

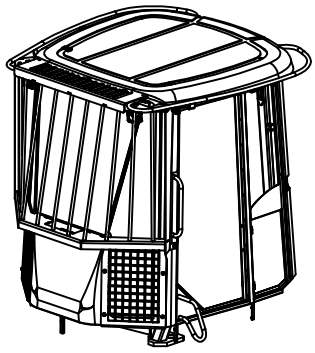

T141893 —UN—09JUN11

TX03679,00017C6 -19-18OCT07-1/1

Inspect Machine

Inspect machine carefully each day by walking around it before starting.

Keep all guards and shields in good condition and properly installed. Fix damage and replace worn or broken parts immediately. Pay special attention to hydraulic hoses and electrical wiring.

T6607AQ —UN—15APR13

TX03679,0001734 -19-03NOV08-1/1

Stay Clear of Moving Parts

Entanglements in moving parts can cause serious injury.

Stop engine before examining, adjusting or maintaining any part of machine with moving parts.

Keep guards and shields in place. Replace any guard or shield that has been removed for access as soon as service or repair is complete.

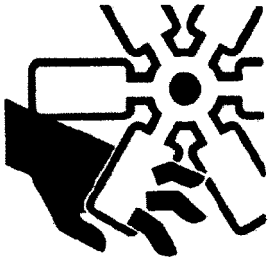

T133592 —UN—15APR13

TX03679,00016D2 -19-03NOV08-1/1

Avoid High-Pressure Fluids

Inspect hydraulic hoses periodically – at least once per year – for leakage, kinking, cuts, cracks, abrasion, blisters, corrosion, exposed wire braid or any other signs of wear or damage.

Replace worn or damaged hose assemblies immediately with John Deere approved replacement parts.

Escaping fluid under pressure can penetrate the skin causing serious injury.

Avoid the hazard by relieving pressure before disconnecting hydraulic or other lines. Tighten all connections before applying pressure.

Search for leaks with a piece of cardboard. Protect hands and body from high-pressure fluids.

If an accident occurs, see a doctor immediately. Any fluid injected into the skin must be surgically removed within a few hours or gangrene may result. Doctors unfamiliar with this type of injury should reference a knowledgeable medical source. Such information is available in English from Deere & Company Medical Department in Moline, Illinois, U.S.A., by calling 1-800-822-8262 or +1 309-748-5636.

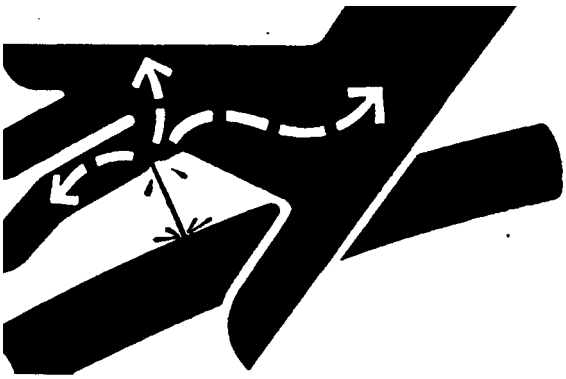

X9811 —UN—23AUG88

DX,FLUID -19-12OCT11-1/1

Avoid High-Pressure Oils

This machine uses a high-pressure hydraulic system. Escaping oil under pressure can penetrate the skin causing serious injury.

Never search for leaks with your hands. Protect hands. Use a piece of cardboard to find location of escaping oil. Stop engine and relieve pressure before disconnecting lines or working on hydraulic system.

If hydraulic oil penetrates your skin, see a doctor immediately. Injected oil must be removed surgically within hours or gangrene may result. Contact a knowledgeable medical source or the Deere & Company Medical Department in Moline, Illinois, U.S.A.

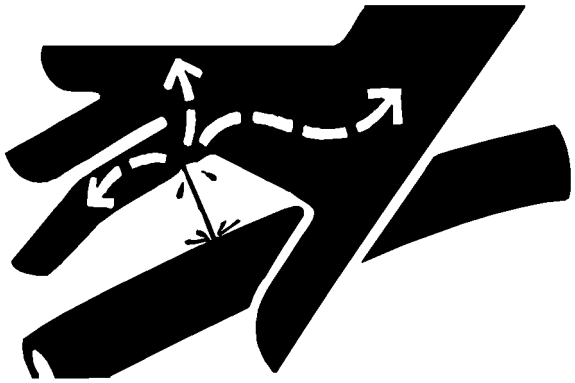

T133509 —UN—15APR13

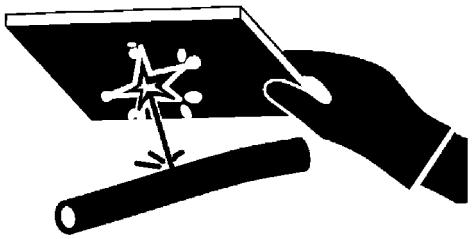

T133840 —UN—20SEP00

TX03679,00016D3 -19-03NOV08-1/1

Beware of Exhaust Fumes

Prevent asphyxiation. Engine exhaust fumes can cause sickness or death.

If you must operate in an enclosed space, provide adequate ventilation. Use an exhaust pipe extension to remove the exhaust fumes or open doors and windows to bring outside air into the area.

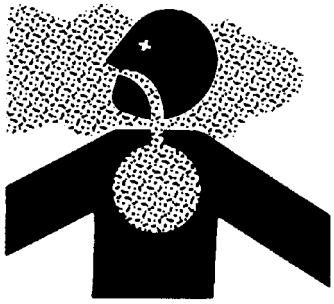

T133546 —UN—24AUG00

TX03679,00016D4 -19-03NOV08-1/1

Prevent Fires

Handle Fuel Safely: Store flammable fluids away from fire hazards. Never refuel machine while smoking or when near sparks or flame.

Clean Machine Regularly: Keep trash, debris, grease and oil from accumulating in engine compartment, around fuel lines, hydraulic lines, exhaust components, and electrical wiring. Never store oily rags or flammable materials inside a machine compartment.

Maintain Hoses and Wiring: Replace hydraulic hoses immediately if they begin to leak, and clean up any oil spills. Examine electrical wiring and connectors frequently for damage.

Keep A Fire Extinguisher Available: Always keep a multipurpose fire extinguisher on or near the machine. Know how to use extinguisher properly.

T133553 —UN—07SEP00

T133554 —UN—07SEP00

T133552 —UN—15APR13

TX03679,00016F5 -19-03NOV08-1/1

Clean Debris from Machine

Keep engine compartment, radiator, batteries, hydraulic lines, exhaust components, fuel tank, and operator's station clean and free of debris.

Clean any oil spills or fuel spills on machine surfaces.

Temperature in engine compartment may go up immediately after engine is stopped. BE ON GUARD FOR FIRES DURING THIS PERIOD.

Open access door(s) to cool the engine faster, and clean engine compartment.

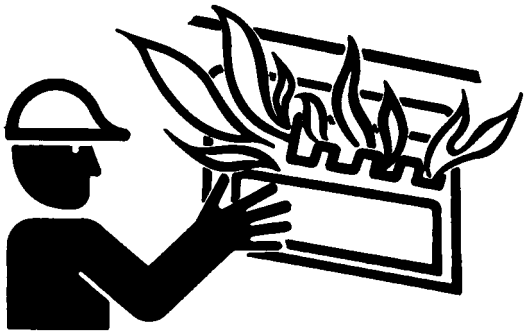

T6669AG —UN—15APR13

OUT4001,00000E3 -19-20AUG09-1/1

Prevent Battery Explosions

Battery gas can explode. Keep sparks, lighted matches, and open flame away from the top of battery.

Never check battery charge by placing a metal object across the posts. Use a voltmeter or hydrometer.

Do not charge a frozen battery; it may explode. Warm battery to 16°C (60°F).

TS204 —UN—15APR13

TX03679,000174A -19-03NOV08-1/1

Handle Chemical Products Safely

Exposure to hazardous chemicals can cause serious injury. Under certain conditions, lubricants, coolants, paints and adhesives used with this machine may be hazardous.

If uncertain about safe handling or use of these chemical products, contact your authorized dealer for a Material Safety Data Sheet (MSDS) or go to internet website http://www.jdmsds.com. The MSDS describes physical and health hazards, safe use procedures, and emergency response techniques for chemical substances. Follow MSDS recommendations to handle chemical products safely.

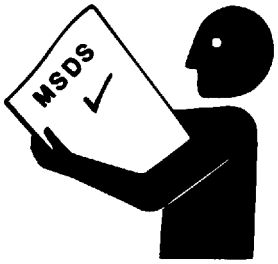

T133580 —UN—25AUG00

TX03679,00016D7 -19-03JAN07-1/1

Dispose of Waste Properly

Improper disposal of waste can threaten the environment. Fuel, oils, coolants, filters and batteries used with this machine may be harmful if not disposed of properly.

Never pour waste onto the ground, down a drain, or into any water source.

Air conditioning refrigerants can damage the atmosphere. Government regulations may require using a certified service center to recover and recycle used refrigerants.

If uncertain about the safe disposal of waste, contact your local environmental or recycling center or your dealer for more information.

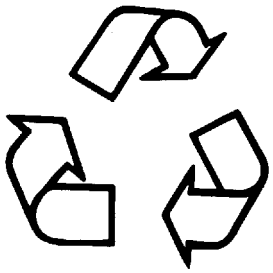

T133567 —UN—25AUG00

TX03679,0001733 -19-03NOV08-1/1

Prepare for Emergencies

Be prepared if an emergency occurs or a fire starts.

Keep a first aid kit and fire extinguisher handy.

Keep emergency numbers for doctors, ambulance service, hospital, and fire department near your telephone.

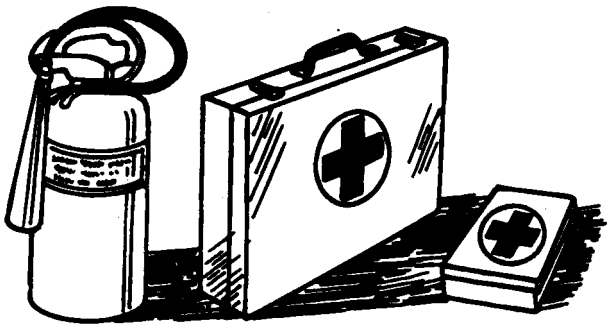

TS291 —UN—15APR13

TX03679,000174B -19-03NOV08-1/1

Use Steps and Handholds Correctly

Prevent falls by facing the machine when getting on and off. Maintain 3-point contact with steps and handrails. Never use machine controls as handholds.

Use extra care when mud, snow, or moisture present slippery conditions. Keep steps clean and free of grease or oil. Never jump when exiting machine. Never mount or dismount a moving machine.

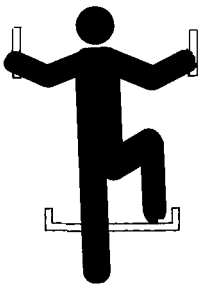

T133468 —UN—15APR13

TX03679,00016F2 -19-24APR13-1/1

Start Only From Operator's Seat

Avoid unexpected machine movement. Start engine only while sitting in operator's seat. Ensure all controls and working tools are in proper position for a parked machine.

Never attempt to start engine from the ground. Do not attempt to start engine by shorting across the starter solenoid terminals.

T133715 —UN—15APR13

TX03679,0001799 -19-22APR10-1/1

Use and Maintain Seat Belt

Use seat belt when operating machine. Remember to fasten seat belt when loading and unloading from trucks and during other uses.

Examine seat belt frequently. Be sure webbing is not cut or torn. Replace seat belt immediately if any part is damaged or does not function properly.

The complete seat belt assembly should be replaced every 3 years, regardless of appearance.

T133716 —19—17APR13

TX03679,00016DD -19-03NOV08-1/1

Prevent Unintended Machine Movement

Lower all equipment to the ground during work interruptions. Place transmission control in neutral, press park brake switch (1) to engage park brake, press pilot enable/boom down switch (2) to disable the hydraulics, and stop engine before allowing anyone to approach the machine.

Follow these same precautions before standing up, leaving the operator's seat, or exiting the machine.

1— Park Brake Switch

2— Pilot Enable/Boom Down Switch

TX1041772A —UN—02MAY08

DP99999,00000A3 -19-28JUN12-1/1

Avoid Work Site Hazards

Avoid contact with gas lines, buried cables, and water lines. Call utility line location services to identify all underground utilities before starting work.

Prepare work site properly. Avoid operating near structures or objects that could fall onto the machine. Clear away debris that could move unexpectedly if run over.

Avoid boom or attachment contact with overhead obstacles or overhead electrical lines. Never move machine closer than 3 m (10 ft.) plus twice the line insulator length to overhead wires.

Keep bystanders clear at all times. Keep bystanders away from raised booms, attachments, and unsupported loads. Avoid swinging or raising booms, attachments, or loads over or near personnel. Use barricades or a signal person to keep vehicles and pedestrians away. Use a signal person if moving machine in congested areas or where visibility is restricted. Always keep signal person in view. Coordinate hand signals before starting machine.

Operate only on solid footing with strength sufficient to support machine. Be especially alert working near embankments or excavations.

Avoid working under overhanging embankments or stockpiles that could collapse under or on machine.

Reduce machine speed when operating with tool on or near ground when obstacles may be hidden (e.g., during snow removal or clearing mud, dirt, etc.). At high speeds hitting obstacles (rocks, uneven concrete, or manholes) can cause a sudden stop. Always wear your seat belt.

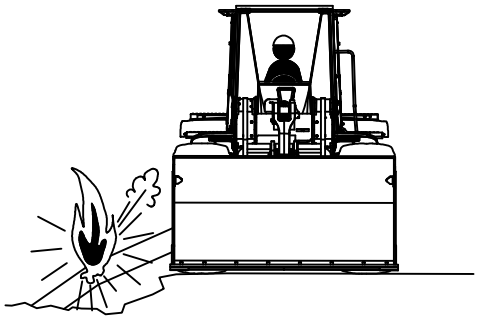

T141894 —UN—15APR13

Avoid Contact With Gas Line

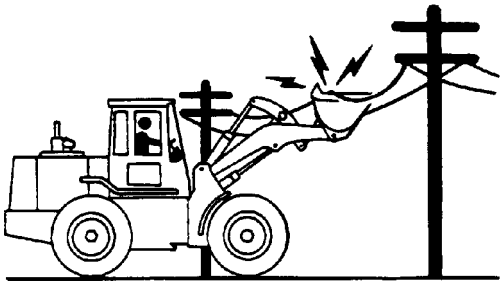

T141670 —UN—24APR01

Avoid Contact With Overhead Electrical Lines

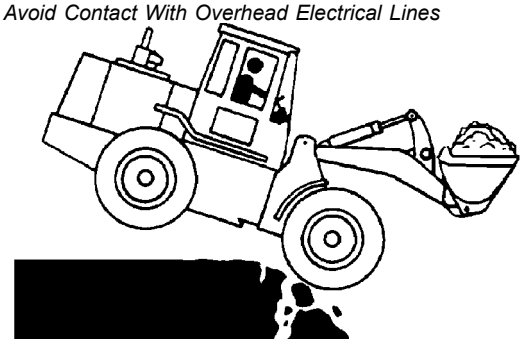

T141672 —UN—04MAY01

Operate Only on Solid Footing

DP99999,0000113 -19-23FEB15-1/1

Use Special Care When Operating Loader

Never use the loader to lift people. Do not allow anyone to ride in the bucket or use the bucket as a work platform.

Operate carefully with raised loads. Raising the load reduces machine stability, especially on side slopes or an unstable surface. Drive and turn slowly with a raised load.

Ensure that objects in the bucket are secure. Do not attempt to lift or carry objects that are too big or too long to fit inside the bucket unless secured with an adequate chain or other device. Keep bystanders away from raised loads.

Be careful when lifting objects. Never attempt to lift objects too heavy for your machine. Assure machine stability and hydraulic capability with a test lift before attempting other maneuvers. Use an adequate chain or sling and proper rigging techniques to attach and stabilize loads. Never lift an object above or near another person.

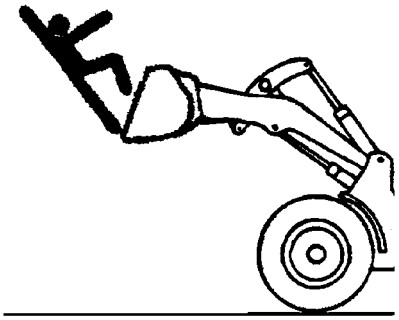

T141957 —UN—15APR13

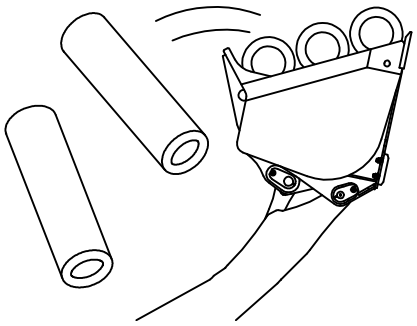

T141902 —UN—07MAY01

TX03768,0000B70 -19-24FEB15-1/1

Keep Riders Off Machine

Only allow operator on machine.

Riders are subject to injury. They may fall from machine, be caught between machine parts, or be struck by foreign objects.

Riders may obstruct operator's view or impair his ability to operate machine safely.

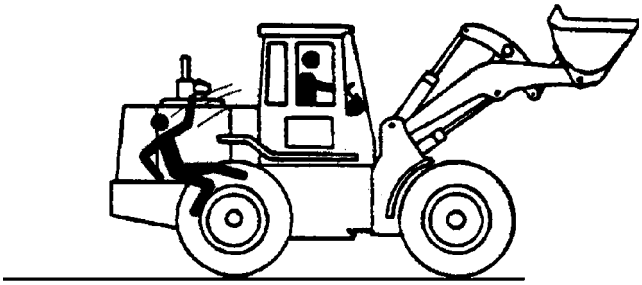

T141671 —UN—15APR13

Keep Riders Off Machine

TX03679,000179B -19-23FEB15-1/1

Avoid Backover Accidents

Before moving machine, be sure that all persons are clear of machine path. Turn around and look directly for best visibility. Use mirrors to assist in checking all around machine. Keep windows and mirrors clean, adjusted, and in good repair.

Be certain reverse warning alarm is working properly.

Use a signal person when backing if view is obstructed or when in close quarters. Keep signal person in view at all times. Use prearranged hand signals to communicate.

Do not rely on the rear camera and radar object detection systems to determine if personnel are behind the machine.

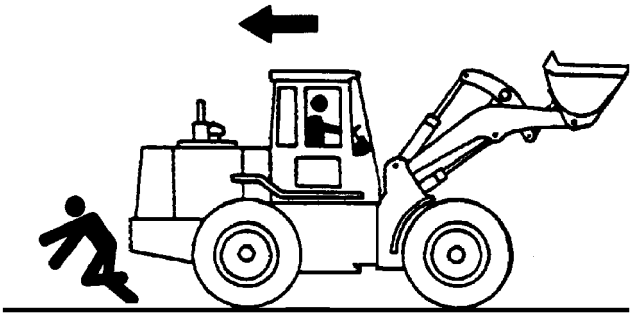

T141673 —UN—04MAY01

The system has limitations due to maintenance practices, environmental conditions, and operating range.

DP99999,00001D7 -19-13MAY09-1/1

Avoid Machine Tip Over

Use seat belt at all times.

Do not jump if the machine tips. You will be unlikely to jump clear and the machine may crush you.

Load and unload from trucks or trailers carefully. Be sure truck is wide enough and on a firm level surface. Use loading ramps and attach them properly to truck bed.

Be careful on slopes. Avoid sharp turns. Balance loads so weight is evenly distributed and load is stable. Carry tools and loads close to the ground to aid visibility and lower center of gravity. Use extra care on soft, rocky, or frozen ground.

Know the capacity of the machine. Do not overload. Be careful with heavy loads. Using oversize buckets or lifting heavy objects reduces machine stability.

Ensure solid footing. Use extra care in soft ground conditions that may not uniformly support the wheels, especially when raising the boom. Do not operate close to banks or open excavations that may cave in and cause machine to tip or fall.

T133716 —19—17APR13

Use Seat Belt

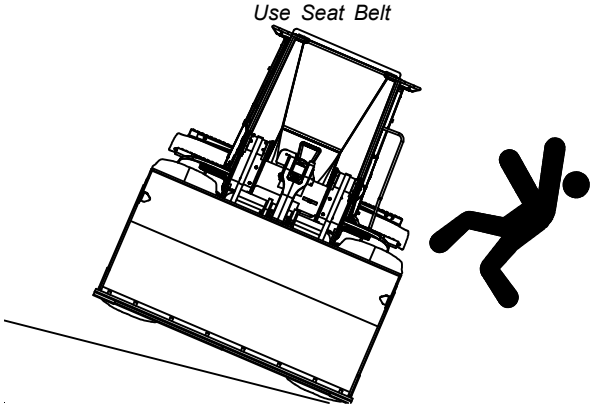

T141676 —UN—04MAY01

Do Not Jump

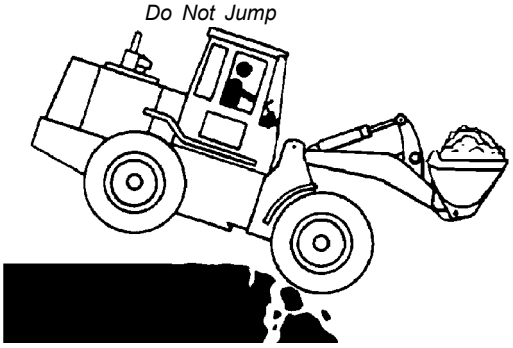

T141672 —UN—04MAY01

Ensure solid footing

TX03679,000179D -19-24FEB15-1/1

Operating on Slopes

Avoid side slope travel whenever possible. Drive up steep slope in forward and down in reverse.

Select low gear speed before starting down slope. The grade of the slope will be limited by ground condition and load being handled.

Use service brakes to control speed. Sudden brake application with a loaded bucket on downhill side could cause machine to tip forward.

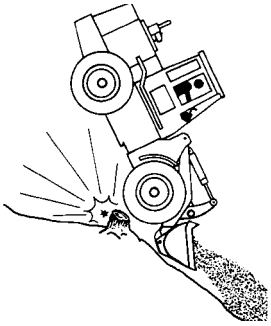

T141681 —UN—15APR13

Operating on Slopes

TX03679,000179E -19-24FEB15-1/1

Operating or Traveling On Public Roads

Machines that work near vehicle traffic or travel slower than normal highway speeds must have proper lighting and markings to assure they are visible to other drivers.

Install additional lights, beacons, slow moving vehicle (SMV) emblems, or other devices and use as required to make the machine visible and identify it as a work machine. Check state and local regulations to assure compliance. Keep these devices clean and in working condition.

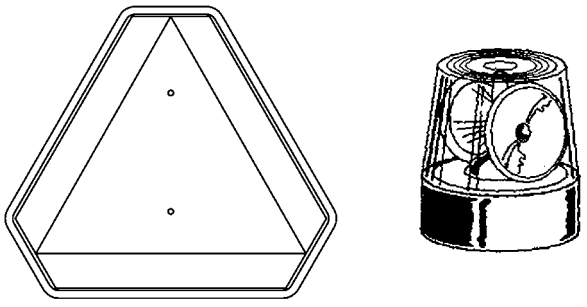

TX03679,00017C8 -19-02MAR07-1/1

Inspect and Maintain ROPS

A damaged roll-over protective structure (ROPS) should be replaced, not reused.

The protection offered by ROPS will be impaired if ROPS is subjected to structural damage, is involved in an overturn incident, or is in any way altered by welding, bending, drilling, or cutting.

If ROPS was loosened or removed for any reason, inspect it carefully before operating the machine again.

To maintain the ROPS:

- Replace missing hardware using correct grade hardware.
- Check hardware torque.
- Check isolation mounts for damage, looseness or wear; replace them if necessary.
- Check ROPS for cracks or physical damage.

TX03679,000179F -19-07SEP06-1/1

Add and Operate Attachments Safely

Always verify compatibility of attachments by contacting your authorized dealer. Adding unapproved attachments may affect machine stability or reliability, and may create a hazard for others near the machine.

Ensure that a qualified person is involved in attachment installation. Add guards to machine if operator protection is required or recommended. Verify that all connections are secure and attachment responds properly to controls.

Carefully read attachment manual and follow all instructions and warnings. In an area free of bystanders and obstructions, carefully operate attachment to learn its characteristics and range of motion.

TX03679,00016F0 -19-24JAN07-1/1

Park And Prepare For Service Safely

Warn others of service work. Always park and prepare your machine for service or repair properly.

- Park machine on a level surface and lower equipment to the ground.
- Engage park brake.
- Stop engine.
- Install frame locking bar.
- Attach a DO NOT OPERATE tag in an obvious place in the operator's station.

Securely support machine or attachment before working under it.

- Do not support machine with boom, bucket, or other hydraulically actuated equipment.
- Do not support machine with cinder blocks or wooden pieces that can crumble or crush.
- Do not support machine with a single jack or other devices that could slip out of place.

Understand service procedures before beginning repairs. Keep service area clean and dry. Use two people whenever the engine must be running for service work.

T133332 —19—17APR13

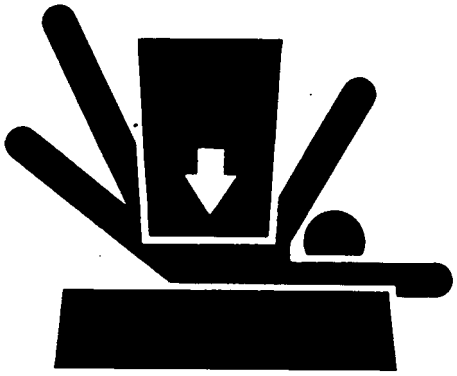

TS229 —UN—23AUG88

DP99999,0000391 -19-12MAR10-1/1

Service Cooling System Safely

Explosive release of fluids from pressurized cooling system can cause serious burns.

Do not service radiator through the radiator cap. Only fill through the surge tank filler cap. Shut off engine. Only remove surge tank filler cap when cool enough to touch with bare hands. Slowly loosen cap to relieve pressure before removing completely.

TS281 —UN—15APR13

TX,SURGE -19-19JAN11-1/1

Service Tires Safely

Explosive separation of a tire and rim parts can cause serious injury or death.

Do not attempt to mount a tire unless you have the proper equipment and experience to perform the job.

Always maintain the correct tire pressure. Do not inflate the tires above the recommended pressure. Never weld or heat a wheel and tire assembly. The heat can cause an increase in air pressure resulting in a tire explosion. Welding can structurally weaken or deform the wheel.

When inflating tires, use a clip-on chuck and extension hose long enough to allow you to stand to one side and NOT in front of or over the tire assembly. Use a safety cage if available.

Check wheels for low pressure, cuts, bubbles, damaged rims or missing lug bolts and nuts.

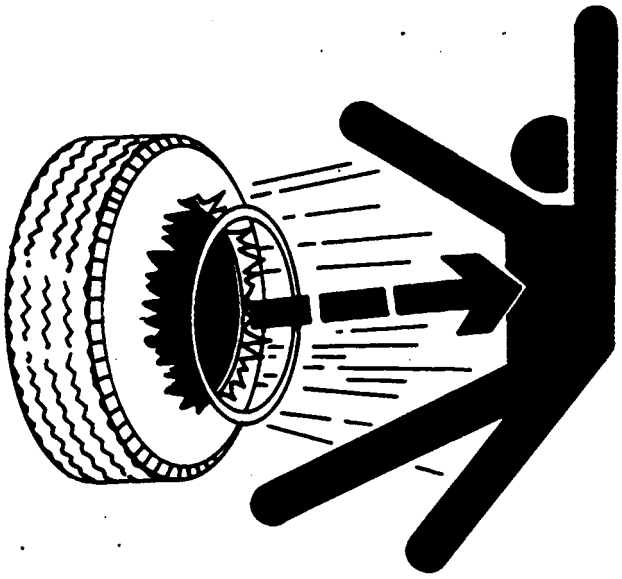

TS211 —UN—15APR13

DX,RIM -19-24AUG90-1/1

Remove Paint Before Welding or Heating

Avoid potentially toxic fumes and dust.

Hazardous fumes can be generated when paint is heated by welding, soldering, or using a torch.

Remove paint before heating:

- Remove paint a minimum of 100 mm (4 in.) from area to be affected by heating. If paint cannot be removed, wear an approved respirator before heating or welding.
- If you sand or grind paint, avoid breathing the dust. Wear an approved respirator.
- If you use solvent or paint stripper, remove stripper with soap and water before welding. Remove solvent or paint stripper containers and other flammable material from area. Allow fumes to disperse at least 15 minutes before welding or heating.

Do not use a chlorinated solvent in areas where welding will take place.

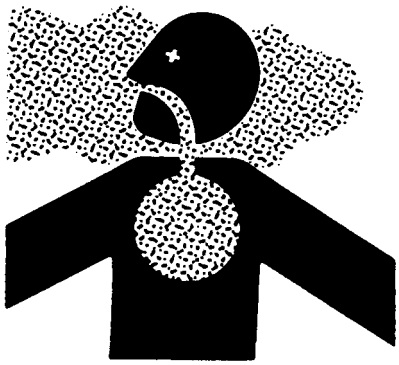

TS220 —UN—15APR13

Do all work in an area that is well ventilated to carry toxic fumes and dust away.

Dispose of paint and solvent properly.

DX,PAINT -19-24JUL02-1/1